GENERAL STRUCTURAL NOTES

THE CONTRACTOR SHALL COORDINATE WORK SHOWN ON THE STRUCTURAL DRAWINGS WITH THOSE OF OTHER TRADES PRIOR TO THE START OF WORK. CONTACT THE ARCHITECT AND ENGINEER IN THE EVENT ANY ERRORS, OMISSIONS, DISCREPANCIES OR CONFLICTS BETWEEN THE TRADES ARE DISCOVERED PRIOR TO PROCEEDING WITH THE WORK TO AVOID UNNECESSARY DELAYS AND/OR CORRECTIVE WORK. BY USING THESE PLANS, THE CONTRACTOR AGREES TO INDEMNIFY, DEFEND, AND HOLD THE ENGINEER HARMLESS FOR ANY AND ALL CLAIMS ARISING OUT OF THE CONTRACTOR'S FAILURE TO FOLLOW THE PLANS AND SPECIFICATIONS, OR THE DESIGN INTENT CONVEYED, OR FOR FAILURE TO OBTAIN AND FOLLOW THE ENGINEER'S GUIDANCE.

NOTES AND DETAILS SHOWN ARE INTENDED TO BE TYPICAL FOR SIMILAR CONDITIONS UNLESS OTHERWISE NOTED.

THE CONTRACTOR IS RESPONSIBLE FOR VERIFYING ALL DIMENSIONS, AS-BUILT OR OTHERWISE, PRIOR TO PROCEEDING WITH THE WORK.

THE DRAWINGS ARE INTENDED TO SHOW THE DESIGN CONCEPT AND ARE NOT TO BE USED AS SHOP DRAWINGS. COMMENTS MADE ON THE SHOP DRAWINGS, OR ON OTHER SUBMITTALS, DURING THE REVIEW DO NOT RELIEVE THE CONTRACTOR FROM COMPLIANCE WITH THE REQUIREMENTS OF THE DRAWINGS AND SPECIFICATIONS. REVIEW IS SPECIFICALLY FOR GENERAL CONFORMANCE WITH THE DESIGN CONCEPT OF THE PROJECT AND GENERAL COMPLIANCE WITH THE INFORMATION GIVEN IN THE CONTRACT DOCUMENTS. THE CONTRACTOR IS RESPONSIBLE FOR: CONFIRMING AND CORRELATING ALL QUANTITIES AND DIMENSIONS; SELECTING THE FABRICATION PROCESSES AND TECHNIQUES OF CONSTRUCTION; COORDINATING HIS OR HER WORK WITH THAT OF ALL OTHER TRADES; AND COMPLETING THE WORK AS SET FORTH IN THE CONTRACT DOCUMENTS.

THE CONTRACTOR SHALL TAKE THE NECESSARY PRECAUTIONS TO AVOID DAMAGE TO EXISTING STRUCTURES INCLUDING BUT NOT LIMITED TO: PROHIBITING CRANES OR OTHER HEAVY EQUIPMENT FROM BEING PLACED ON SLABS OR ADJACENT TO FOUNDATIONS WALLS, PROHIBITING THE PLACEMENT OF CONCENTRATED LOADS ON SLABS OR FLOORS, AND PROHIBITING THE MODIFICATION OF STRUCTURAL MEMBERS IN ANY WAY OTHER THAN AS SHOWN ON THE STRUCTURAL DRAWINGS.

THE CONTRACTOR SHALL BE RESPONSIBLE FOR ALL BRACING AND SHORING REQUIRED TO COMPLETE THE WORK. THIS RESPONSIBILITY INCLUDES RETAINING AN ENGINEER TO DESIGN ALL NECESSARY BRACING, SHORING OR UNDERPINNING FOR EXISTING STRUCTURES.

STRUCTURAL DESIGN CRITERIA

THE STRUCTURAL DESIGN IS BASED ON THE 2009 INTERNATIONAL BUILDING CODE. ALL CONSTRUCTION SHALL COMPLY WITH THIS AND ALL OTHER APPLICABLE CODES AND STANDARDS.

SNOW:	GROUND SNOW LOAD (Pg)	75 PSF
	FLAT-ROOF SNOW LOAD (Pf)	53 PSF
	SLOPED-ROOF SNOW LOAD (Ps)	25 PSF
	(SLATE ROOFING WITHOUT SNOW FENCE)	
	SNOW EXPOSURE FACTOR (Ce)	1.0
	SNOW LOAD IMPORTANCE FACTOR (I)	1.0
	THERMAL FACTOR (Ct)	1.0
	(HEATED STRUCTURE WITH NON-VENTILATED ROOF)	

SUBMITTALS AND OBSERVATIONS

SHOP DRAWINGS AND SUBMITTALS SHALL BE PREPARED IN ACCORDANCE WITH THE APPLICABLE INDUSTRY STANDARD.

THE CONTRACTOR ASSUMES FULL RESPONSIBILITY TO VERIFY THAT ALL REQUIRED SHOP DRAWINGS AND OTHER SUBMITTALS HAVE BEEN REVIEWED PRIOR TO THE START OF WORK.

THE FOLLOWING IS A LIST OF SUBMITTALS REQUIRED:

STRUCTURAL STEEL
SHOP DRAWINGS

THE CONTRACTOR IS TO COORDINATE THE ENGINEER'S OBSERVATION OF CONSTRUCTION AT THE FOLLOWING MILESTONES:

AFTER COMPLETION OF RETROFITS.

ABBREVIATIONS AND LEGEND

ACI	AMERICAN CONCRETE INSTITUTE
AISC	AMERICAN INSTITUTE OF STEEL CONSTRUCTION
ASTM	ASTM INTERNATIONAL
BF	BIG FOOT STYLE FOOTING
BOT	BOTTOM
BP	BASE PLATE
BRP	BEARING PLATE
BRG	BEARING
CMU	CONCRETE MASONRY UNIT(S)
CONT	CONTINUOUS
CT	CONTRACTION JOINT
DIA	DIAMETER
EA	EACH
ELEV	ELEVATION
EW	EACH WAY
FD	FLOOR DRAIN
FF	FINISH FLOOR
FTG	FOOTING
GALV	GALVANIZE
HDG	HOT DIP GALVANIZE
HORIZ	HORIZONTAL
IBC	INTERNATIONAL BUILDING CODE
NA	NEUTRAL AXIS
NTS	NOT DRAWN TO SCALE
OC	ON CENTER
REINF	REINFORCE(D)(ING)
REQD	REQUIRED
SDI	STEEL DECK INSTITUTE
SECT	SECTION
SIM	SIMILAR
SJI	STEEL JOIST INSTITUTE
SS	STAINLESS STEEL
STL	STEEL
TOC	TOP OF CONCRETE
TOCP	TOP OF CONCRETE PIER
TOCW	TOP OF CONCRETE WALL
TOS	TOP OF STEEL
TYP	TYPICAL
UNO	UNLESS NOTED OTHERWISE
VERT	VERTICAL
VIF	VERIFY IN THE FIELD
VL	BOISE VERSALAM
W/	WITH
WWF	WELDED WIRE FABRIC
#	SIZE OF REINFORCING BAR
@	AT
( )	INDICATES QUANTITY
⬡	INDICATES DRAWING NOTE KEYED TO PLAN

STRUCTURAL STEEL NOTES

STRUCTURAL STEEL FABRICATION AND ERECTION SHALL BE IN ACCORDANCE WITH THE AMERICAN INSTITUTE OF STEEL CONSTRUCTION (AISC) SPECIFICATION FOR STRUCTURAL STEEL BUILDINGS – ALLOWABLE STRESS DESIGN AND PLASTIC DESIGN, AND WITH THE AISC CODE OF STANDARD PRACTICE FOR STEEL BUILDINGS AND BRIDGES WITH THE EXCEPTION OF PARAGRAPH 4.2.1.

CHANNELS, ANGLES, PLATES AND BARS SHALL CONFORM TO ASTM A 36 WITH A MINIMUM YIELD STRESS (Fy) OF 36 KSI.

BOLTS SHALL CONFORM TO ASTM A 325-N TIGHTENED TO SNUG TIGHT CONDITION UNLESS NOTED OTHERWISE. COMPLY WITH THE AISC SPECIFICATION FOR STRUCTURAL JOINTS USING ASTM A 325 OR A 490 BOLTS.

WELDING ELECTRODES SHALL BE E70 COMPLYING WITH THE REQUIREMENTS OF AWS D1.1.

WELDERS SHALL BE QUALIFIED TO PERFORM THE TYPE AND POSITION OF THE WELDS SPECIFIED.

WOOD FRAMING NOTES

WOOD FRAME CONSTRUCTION SHALL COMPLY WITH THE 2009 INTERNATIONAL BUILDING CODE.

DIMENSIONED LUMBER SHALL CONFORM TO THE LATEST EDITION OF N.F.P.A. "NATIONAL DESIGN SPECIFICATION FOR WOOD CONSTRUCTION" AND ITS SUPPLEMENTS. PROVIDE SPRUCE-PINE-FIR NORTH, NO. 2 GRADE OR BETTER.

EACH PIECE OF LUMBER SHALL BEAR THE GRADE MARK OF A RECOGNIZED AGENCY OR INDEPENDENT INSPECTION SERVICE CERTIFIED BY THE BOARD OF REVIEW, AMERICAN LUMBER STANDARDS COMMITTEE. GRADE MARK TO INDICATED SPECIES, GRADE, AND MANUFACTURER'S NUMBER.

ENGINEERED LUMBER SHALL BE AS MANUFACTURED BY EITHER BOISE CASCADE OR WEYERHAEUSER. ALL LAMINATED VENEER LUMBER (LVL) BEAMS AND HEADERS SHALL HAVE THE FOLLOWING PROPERTIES: E = 2,000,000 PSI; Fb= 2,600 PSI; Fv= 285 PSI; Ft = 1555 PSI; COMPRESSION PARALLEL TO GRAIN = 2510 PSI; COMPRESSION PERPENDICULAR TO GRAIN = 750 PSI.

TIMBERLOK, LEDGERLOK, TRUSSLOK, TRUSSLOK-Z, OLYLOG, LOGHOG ARE MANUFACTURED BY FASTENMASTER. ALTERNATIVE FASTENERS MAY BE USED IF TEST DATA IS SUBMITTED TO THE ENGINEER SHOWING LOAD CAPACITIES ARE AT LEAST EQUIVALENT TO THE FASTENMASTER BRAND FASTENERS.

NAILS SHALL MEET THE REQUIREMENTS OF ASTM F1667 AND AS FOLLOWS:
10D NAILS: 3" X 0.131" DIAMETER

PNEUMATICALLY DRIVEN NAILS SHALL BE FULL HEAD NAILS AS MANUFACTURED BY SENCO, OR EQUIVALENT.

WOOD CONNECTOR DESIGN IS BASED ON SIMPSON STRONG-TIE COMPANY PRODUCTS. SUBSTITUTION SHALL BE APPROVED BY THE ENGINEER PRIOR TO USE.

STEEL FOR BOLTS, NUTS, WASHERS, BRIDGING, METAL CONNECTORS, AND LAG BOLTS TO CONFORM TO ASTM A 307.

THROUGH BOLTS SHALL BE INSERTED IN PRE-DRILLED HOLES WITH DIAMETER EQUAL TO THE BOLT DIAMETER PLUS 1/16". LAG BOLTS GREATER THAN 3/8" DIAMETER SHALL BE SCREWED INTO PRE-DRILLED LEAD HOLES WITH DIAMETER EQUAL TO ONE-HALF THE LAG BOLT DIAMETER.

NO BEAMS, HEADERS, JOISTS, OR STUDS SHALL BE CUT, NOTCHED, OR BORED TO CLEAR PIPES, WIRE, CONDUIT, OR FOR OTHER PURPOSE WITHOUT REVIEW BY THE ENGINEER. NOTCHING OR BIRDSMOUTH IN MEMBERS IS NOT PERMITTED UNLESS NOTED OTHERWISE.

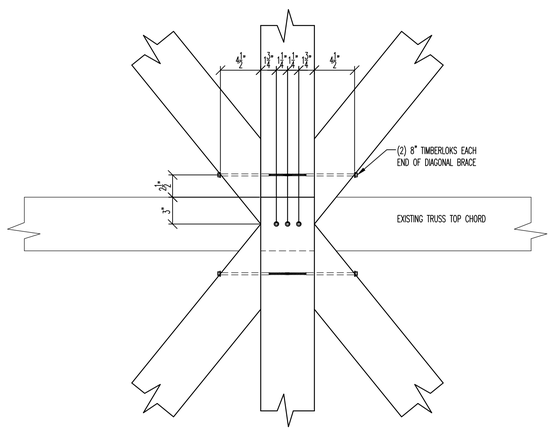

DETAIL 1/S1
1 1/2" = 1'-0"

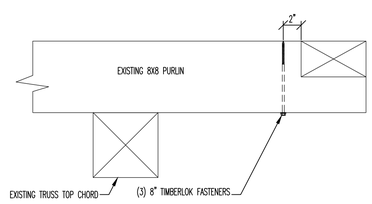

SECTION A/S1
1 1/2" = 1'-0"

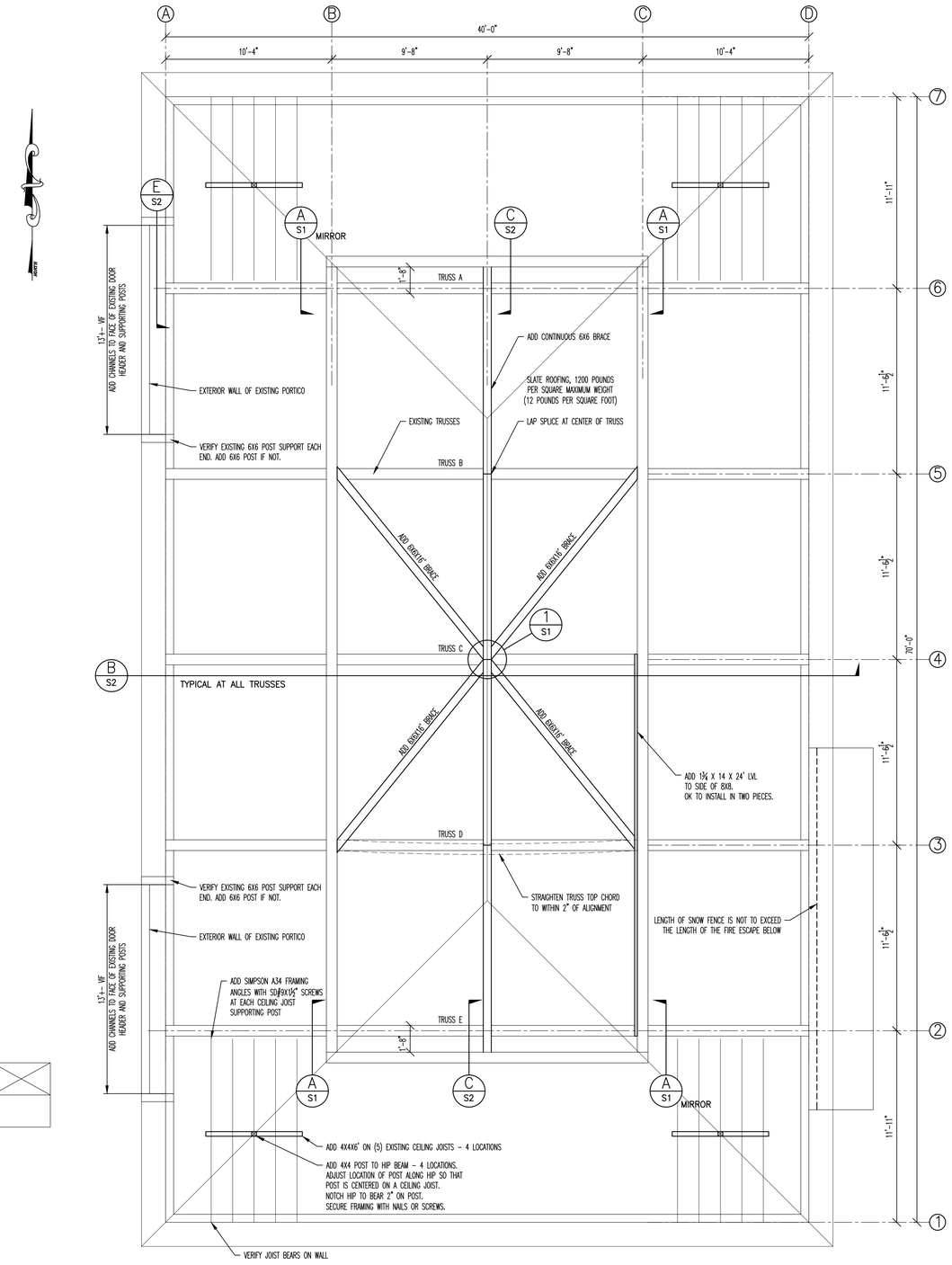

PARTIAL ROOF FRAMING PLAN
SCALE: 1/4" = 1'-0"

STRUCTURAL NOTES, FRAMING PLAN, SECTION AND DETAIL

FISHER ENGINEERING, P.C.
686 BELKNAP MOUNTAIN ROAD
GILFORD, NEW HAMPSHIRE 03249
(603) 528-7641

DUNBARTON TOWN HALL LIBRARY
ROOF RETROFIT
1004 SCHOOL STREET
DUNBARTON, NEW HAMPSHIRE

REVISIONS:
7/22/16 REVISED DETAIL 2, SECTION D

DATE: JUNE 24, 2016
FEPC JOB NO.: 16582
DRAWING NO:
S1

SH 1 OF 2

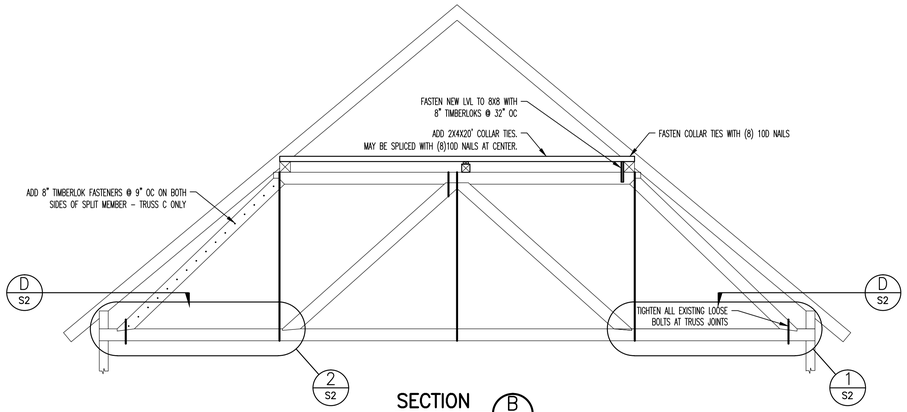

SECTION B S1
1/4" = 1'-0"

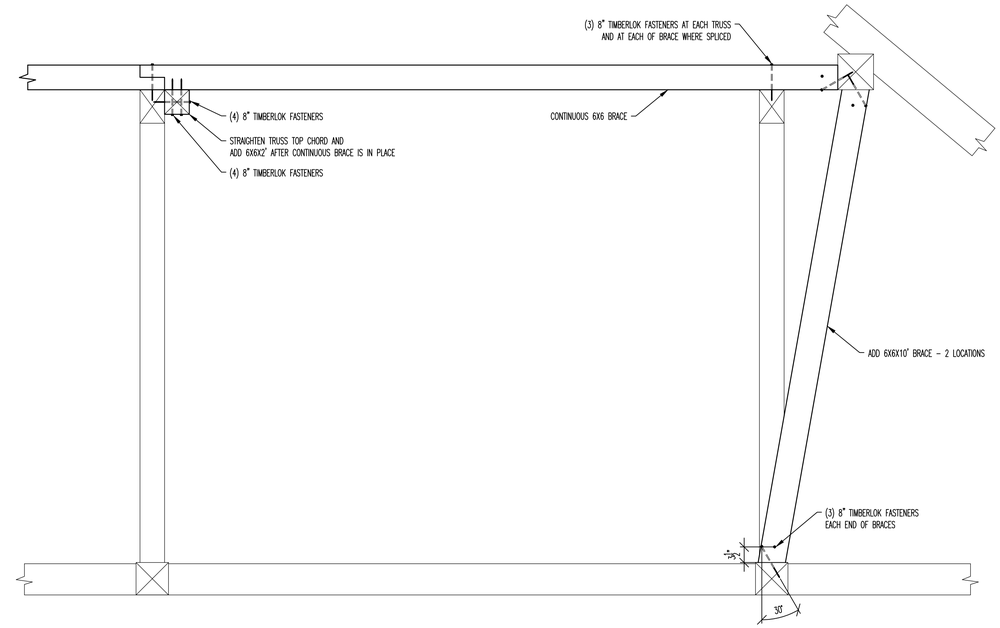

SECTION C S1
3/4" = 1'-0"

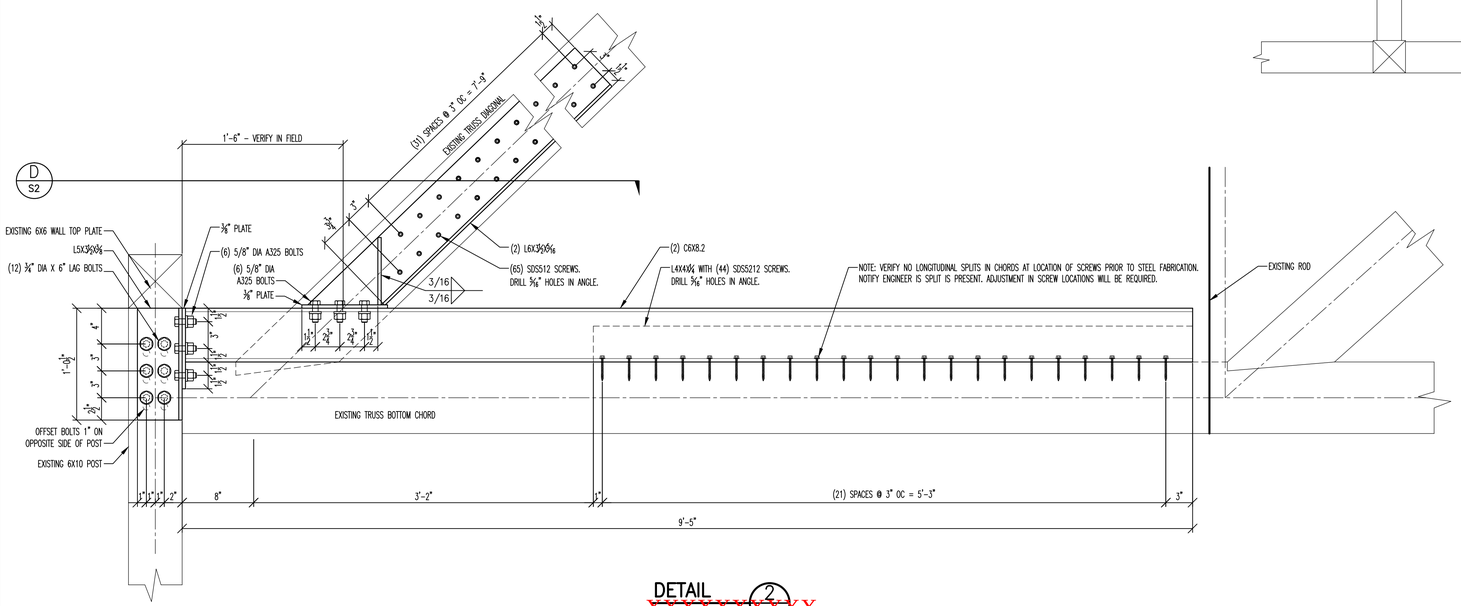

DETAIL 2
~~1 1/2" = 1'-0" S2~~
~~XXXXXXXXXXX~~
**Omit installation of steel plate over door entries in quote.

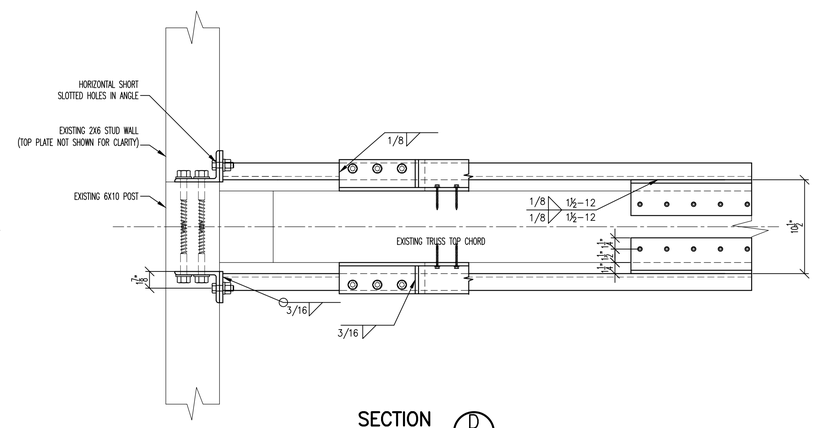

SECTION D S2
1 1/2" = 1'-0"

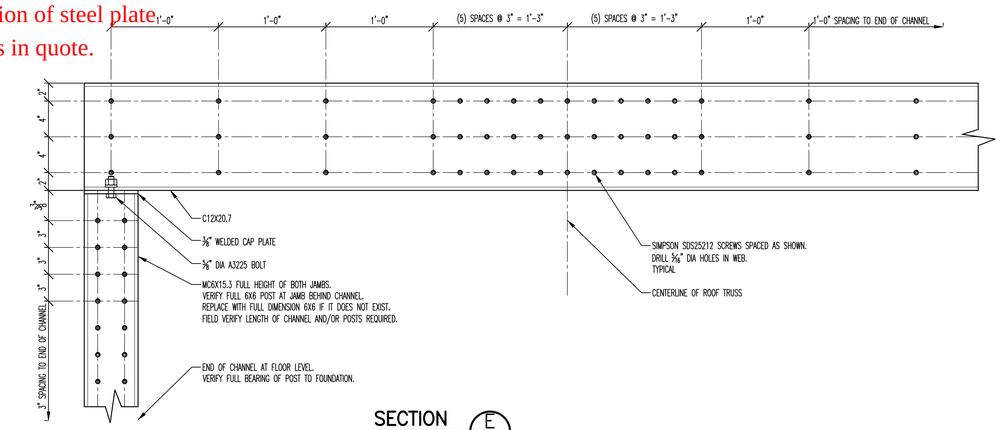

SECTION E S1
1 1/2" = 1'-0"

SECTIONS AND DETAIL

FISHER ENGINEERING, P.C.
686 BELKNAP MOUNTAIN ROAD
GILFORD, NEW HAMPSHIRE 03249
(603) 528-7641

NEW HAMPSHIRE – STANLEY J. FISHER – No. 7662 – LICENSED PROFESSIONAL ENGINEER

DUNBARTON TOWN HALL LIBRARY
ROOF RETROFIT
1004 SCHOOL STREET
DUNBARTON, NEW HAMPSHIRE

REVISIONS:
7/22/16 REVISED DETAIL 2, SECTION D

DATE: JUNE 24, 2016
FEPC JOB NO.: 16582
DRAWING NO:
S2
SH 2 OF 2